3 Series Treadmill

16-1295

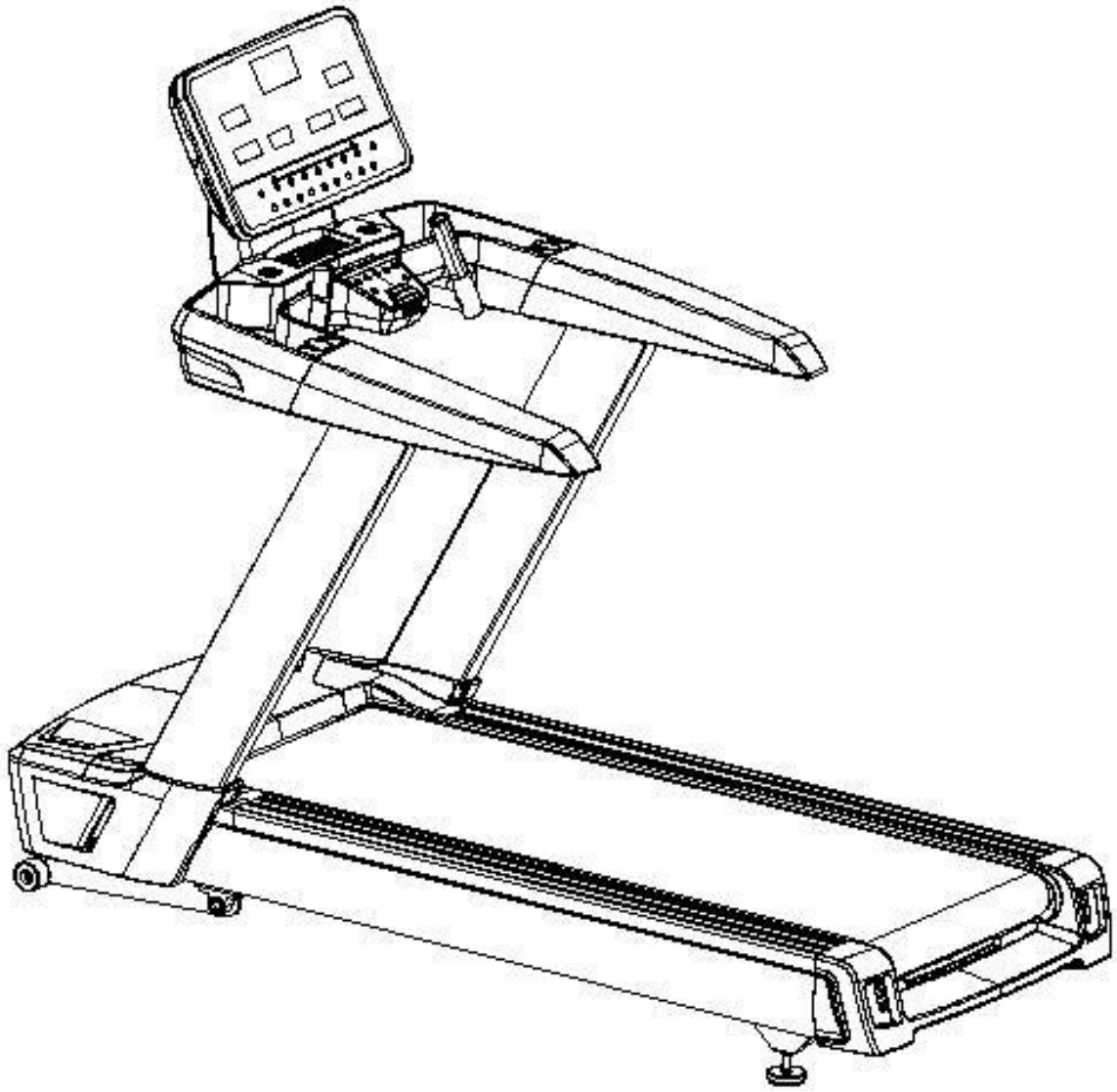

THANKYOU

User Guide

1. Always connect the power plug to a socket with a grounded circuit and the socket must have a special circuit to avoid sharing with other electrical equipment.
2. Ensure the treadmill stable on the ground before use.
3. Check if it functions normal or not before running.
4. Stand on two side rails when the treadmill starts
5. Clipped the safety key to your clothes when upcoming to control any emergency.
6. Press the “start” button to get the treadmill started.
7. Follow the running belt with left leg to do preparation before trial run. Only when you feel right, then run with two legs on the treadmill with proper running posture.
8. The treadmill is FOR ONE PERSON ONLY. Overload is not allowed.
9. You can adjust speed if necessary.
10. After running, you can stop the treadmill by pulling out the safety key or pressing the “stop” button.
11. Remember to turn off the power and pull out the plug when you finish exercising.

Safety Precaution:

- Place the treadmill indoors to avoid any water and no heavy load.
- When using the fitness device, wear comfortable clothing and preferably sports or aerobic shoes.
- Keep children away from the treadmill to avoid any accident.
- No overload that may damage motor, controller, roller and running belt. Ensure routine maintenance to the treadmill.
- Keep as dust free as possible and a certain extent of humidity to avoid interference of console and controller.
- Keep the household treadmill continuously running for no more than 2 hours.
- Keep good air circulation when running.
- There should be 2000x1000mm safe space at the end of treadmill when running.
- Stop running if there is any discomfort and consult the doctor.
- Reserve the silicon bottle to a safe place that children cannot reach, to avoid serious injury.
- Prohibit the user from jumping off the treadmill directly after use.
- Pull out the power gently from the socket.
- Stop the machine if anything is wrong and cut the power immediately.
- Ask professional help to handle any issue or provide service. Dismantle the components personally is not allowed.

Warning: To reduce accidents or injuries to others, please comply with following rules.

- Ensure your clothes zipped up before running.
- Do not wear clothes that are easily hooked.
- Keep power cord away from hot objects.
- Keep children away from the treadmill.
- If something is wrong, support the handlebar to push up and leave running belt.
- Do not use the treadmill outdoors.
- Cut off the power before moving of the treadmill .
- Do not open motor and roller cover unless with professional help.

- ◆ This machine is only used in 10 amperage circuits.
- ◆ Only one person is allowed to exercise on the treadmill when it starts.
- ◆ The HRC testing may not be as exact as medical devices so its results are for reference only .
- ◆ Stop exercising immediately should you feel unwell or if you feel pain in your joints or muscles. Keep an eye on how your body is responding to the exercise program. Dizziness is a sign that you are exercising too intensively with the device. At the first signs of dizziness, lay down on the ground until you feel better.

Safety Notice

◆ When you are remedial or have any of the symptoms below, discuss with your doctor before using this treadmill.

1. Waist, neck or leg pain, legs, waist, neck and hand numbness.
2. Have anamorphic arthritis, rheumatic and gout.
3. Have osteoporosis and other abnormalities.
4. Have perfunctory system obstacles (heart disease, blood obstacle, hypertension).
5. Have breathing conditions.
6. Using the manpower pulse adjust machine or an internal body machine.
7. Have sarcomata.
8. Have thrombus or other symptoms.
9. Have diabetes or diabetes caused perceptual disturbance
10. Have skin trauma.
11. Hyperpyrexia caused by sick (38 ℃or over 38 ℃).
12. Abnormal back bone or back bone bending.
13. Pregnant or catamenia.
14. Feel physical abnormality, need convalesce.
15. Body condition is not very well.
16. The aim is to heal.
17. Except the upper symptoms, feeling any other physical abnormality.

----May cause the accident or the poor body condition.

◆ Stop exercising immediately should you feel unwell like pain in your joints or muscles, dizziness, numbness, and abnormal heart beat, and consult the doctor as soon as possible.

◆ Children are not allowed to use the product and play around it.

- There might be a risk of injury if you ignore it.

◆ The Child's guardian/supervisor cannot allow the children to play with the product.

- There might be a risk of injury if you ignore it.

◆ Make sure there's no people or pets around the product (rear side / lower side / front side) when using, taking out, or moving the product.

Prohibition!

◆ Stop using this product if the cover cracks (inner parts come out) or welded parts drop off. Otherwise, accidents or injuries might occur.

◆ Do not jump up or down from the treadmill when running. Otherwise, injuries may occur by falling down.

◆ Do not use or reserve the treadmill outdoor or near bathroom to avoid water.

◆ Do not use or reserve the treadmill in the area exposed to direct sunlight and avoid high temperature places like near an electric blanket and warmer. It may cause electric leakage or fire.

◆ Do not use the treadmill when the power cord or power plug is damaged, or the jack socket is loose. Otherwise, it may cause electric shock or short circuit or fire.

◆ Do not damage or forcibly bend or twist the power cord. Meanwhile, do not place heavy objects on it, do not allow the power cord to be caught. Otherwise, it may cause fire or electrical shock.

◆ Only for one person at a time, be careful not to let people around approaching during use. Otherwise, accidents or injuries may occur by falling.

◆ People who cannot express consciousness on their own or are unable to operate by themselves can't use the treadmill. Otherwise, accidents or injuries might occur.

Prohibition of Disassembly!

◆ Disassembly, repairs, and changes are absolutely prohibited. Risk of injury due to mechanical failure. Ensure to avoid water!

◆ Do not drench the main body or operate with water or drinks. It may cause electric shock or fire.

Attention !

◆ Do not exercise too much if you do not regularly train.

◆ Do not use the treadmill after meals or when you feel tired. It may damage your health.

◆ The product is available for home and gym use. Not to be used by many non-specific users in schools, gymnasiums, etc. There is a risk of injury.

◆ Do not use the product when eating or drinking or doing other activities.

◆ Do not use the product when feeling the body become slow after drinking alcohol. Otherwise, accidents or injuries might occur.

◆ Do not use the product when you have hard object in your pants pocket. Otherwise, accidents or injuries might occur.

◆ Do not attach pins, garbage or water to the power plug. It may cause electric shock or short circuits or fire.

◆ Do not pull out the power plug or switch the power switch to OFF during using the treadmill.

No operation by wet hand!

◆ Do not pull out or insert the power plug with a wet hand.

Pull out the power plug!

◆ Pull out the power plug when the treadmill is not in use. As the dust and moisture will deteriorate insulation which may cause leakage current fire.

◆ Be sure to pull out the power plug before the treadmill gets maintenance. Otherwise, electrical shocks or injuries might occur.

◆ Stop using the treadmill and pull out the power plug immediately if it cannot start or is in abnormal status. And entrust professionals to check and repair it. Otherwise, electric shocks or injuries might occur.

◆ Pull out the power plug immediately when the electricity is off. Otherwise, accidents or injuries might occur

once the electricity is restored.

◆ Do hold the power plug when unplugging the power plug out instead of holding the wire. Otherwise, it may cause short circuits or power shock or fire.

Grounding Specification

◆ The treadmill must be grounded. Grounding will provide a path of least resistance for the current if there's any malfunction occurred and reduce the risk of electric shock.

◆ The treadmill is equipped with grounding conductor and grounding plug. The plug must be inserted into a suitable power socket which's in compliance with local regulations or ordinances and has been properly installed and grounded.

Dangers!

◆ It'll cause the risk of electrocution if the grounding conductor of the device is connected improperly. Even if the plug that comes with the product does not fit the socket, it cannot be modified. Please entrust professional electricians to install suitable sockets.

◆ The plug of the treadmill has a grounding wire. Make sure the plug is connected to a socket with the same shape and it cannot use adapter sockets.

◆ This product cannot be used as medical equipment.

.

Exploded Diagram

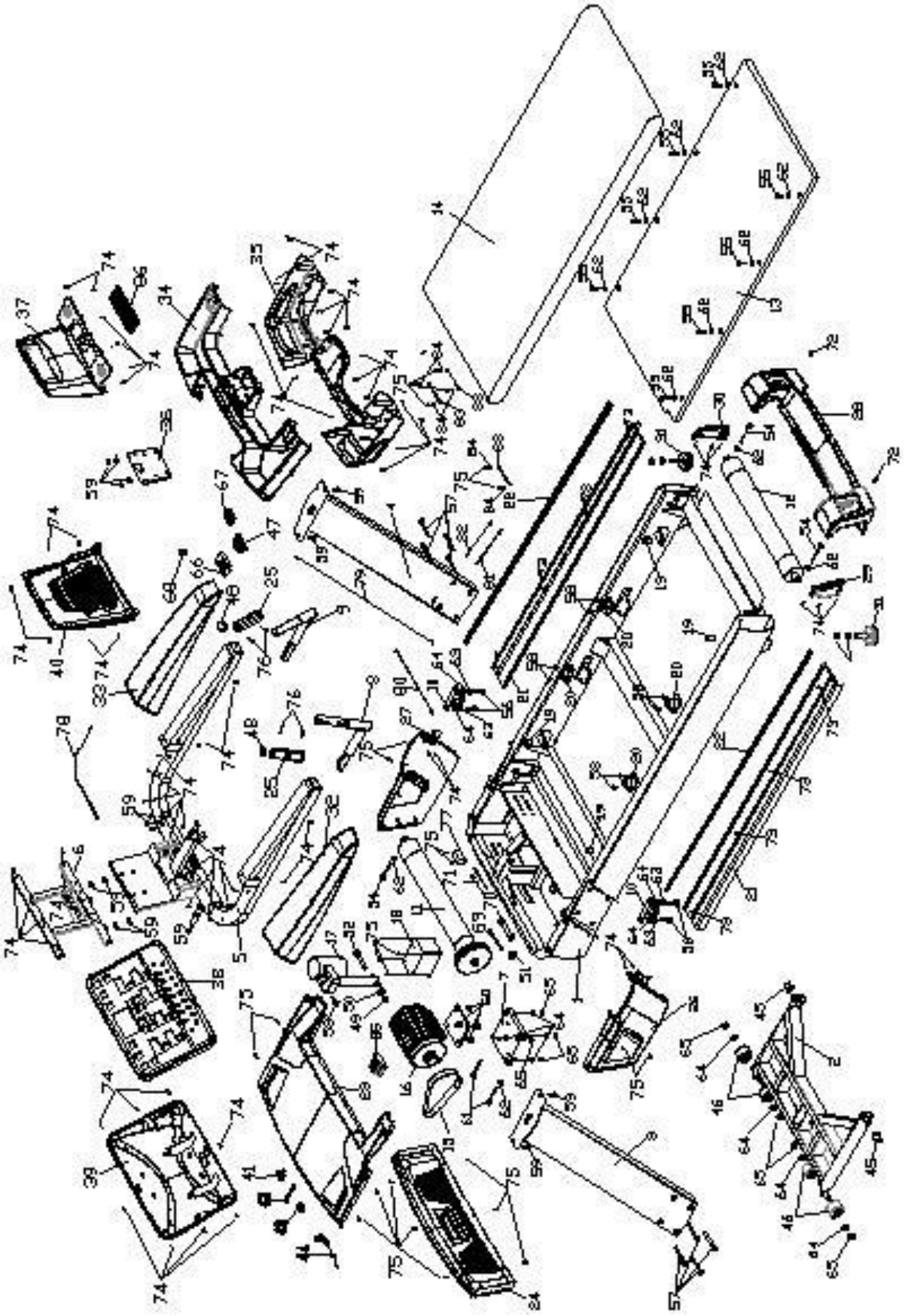

Part List

No.	Description	Specification	QTY
1	Base Frame		1
2	Incline Frame		1
3	Upright Post Left		1
4	Upright Post Right		1
5	Console Frame		1
6	Display Frame		1
7	Motor Frame		1
8	Handle Pulse Frame (left)		1
9	Hand Pulse Frame (right)		1
10	Fixing Base	t25×91×51 (zinc plating-white)	2
11	Front Roller	Φ150×Φ85×Φ25×715	1
12	Rear Roller	Φ85×Φ25×638×705	1
13	Running Board		1
14	Running Belt		1
15	Motor Belt		1
16	AC Motor		1
17	Incline Motor		1
18	Inverter		1
19	Cylindrical Cushion	Φ30×30×M8×8	4
20	Mounted Cushion	80×54×40(red)	4
21	Aluminium Side Rail	128×49×1400	2
22	Rubber Pad of Side Rail	100×8×700	2
23	Motor Cover	810×595×68	1
24	Motor Cover Front	810×114×192	1
25	Handle Pulse Set	cylinder length 133 (with metal plate)	2
26	End Cover of Upright Post Left		1
27	End Cover of Upright Post Right		1
28	Rear Cover	855×163×195	1
29	End Cap of Rear Cover Left	78×34×155	1
30	End Cap of Rear Cover Right	78×34×155	1
31	Foot Pad	Φ74×86×M12	2
32	PU Handlebar Left		1
33	PU Handlebar Right		1
34	Console Upper Housing		1
35	Console Lower Housing	926×377×129	1
36	Console connectting Board	5.0x131x168	1
37	Console Mounting Base	432×208×227	1
38	Console		1
39	Display Back Cover	586×82×359	1
40	Console back cover	5550EA/408×123×316	1
41	Power Socket	250V/10A/ Red L-60/ Black L-150/ Yellowish Green L-320	1

Item	Description	Specification	QTY
42	Fuse (with wire)	FP-ZHY-8(6.35×30)/15A	1
43	Switch	30A	1
44	Power Cord	3×1.5mm2×2000	1
45	Powder Metallurgy Sleeve	Φ35×Φ30×Φ20×27	2
46	Wheel	Φ59xΦ15.5xt40	4
47	Safety Key Press Part	83.5×42.7×33.2	1
48	Pipe Plug		2
49	Hex Locknut	M12	1
50	Flat Washer	Φ12	1
51	Magnet ring	Φ35xΦ22xt15	1
52	Allen C.K.S. Bolt (half thread)	M12×70×20	1
53	Allen C.K.S. Bolt (half thread)	M10×40×20	1
54	Allen Cylinder Bolt (full thread)	M8×75	3
55	Allen Sunk Bolt (full thread)	M8×30	8
56	Allen Cylinder Bolt (full thread)	M10×35	4
57	Allen Cylinder Bolt (full thread)	M8×80	8
58	Allen Cylinder Bolt (full thread)	M8×10	8
59	Allen C.K.S. Bolt (full thread)	M8×20	16
60	Allen Cylinder Bolt (full thread)	M8×15	4
61	Allen Cylinder Bolt (full thread)	M8×55	2
62	Flat Washer	Φ8	16
63	Spring Washer	Φ10	4
64	Flat Washer	Φ10	12
65	Hex Locknut	M10	8
66	Safety Key Mounting Base	106×54×24	1
67	Safety Key Pulling Part	60.5×42×12	1
68	Tension Spring	Φ11.8×Φ0.8×24	1
69	Connecting Wire (grounding)	L-150mm/ 1.5mm2/ #6.3 female terminal/ Φ6 terminal	1
70	Power Connection Wire	L-450mm (red)	2
71	Power Connection Wire	L-450mm (black)	1
72	Phillips C.K.S. Bolt (full thread)	M5×15 (steel nail)	2
73	Phillips C.K.S. Self-tapping Screw	ST4×20	8
74	Phillips C.K.S. Self-tapping Screw	ST4×16	72
75	Phillips C.K.S. Screw (full thread)	M4×16 (steel nail)	26
76	Philips Pan Head Self-tapping Bolt (full thread)	ST3x25	4
77	Filter	10A	1
78	Communication Wire	5552EA/L-900mm	1
79	Communication Wire	5552EA/L-1200mm	1
80	Communication Wire	5552EA/L-800mm	1
81	Power Connection Wire	L-800mm/1.5mm2/ Red	1
82	Power Connection Wire	L-800mm/1.5mm2/ Black	1
83	Connecting Wire (grounding)	L-200mm/1.5mm2	3

Item	Description	Specification	QTY
84	Serrated Lock Washer	Φ5	6
85	Switching power supply		1
86	NFC silicone pad		1
87	Phillips C.K.S. Screw (self-tapping)	ST4×8	2
88	Power cord fastener		1
89	Phillips C.K.S. Screw (full thread)	M3×10	4

Treadmill Instruction

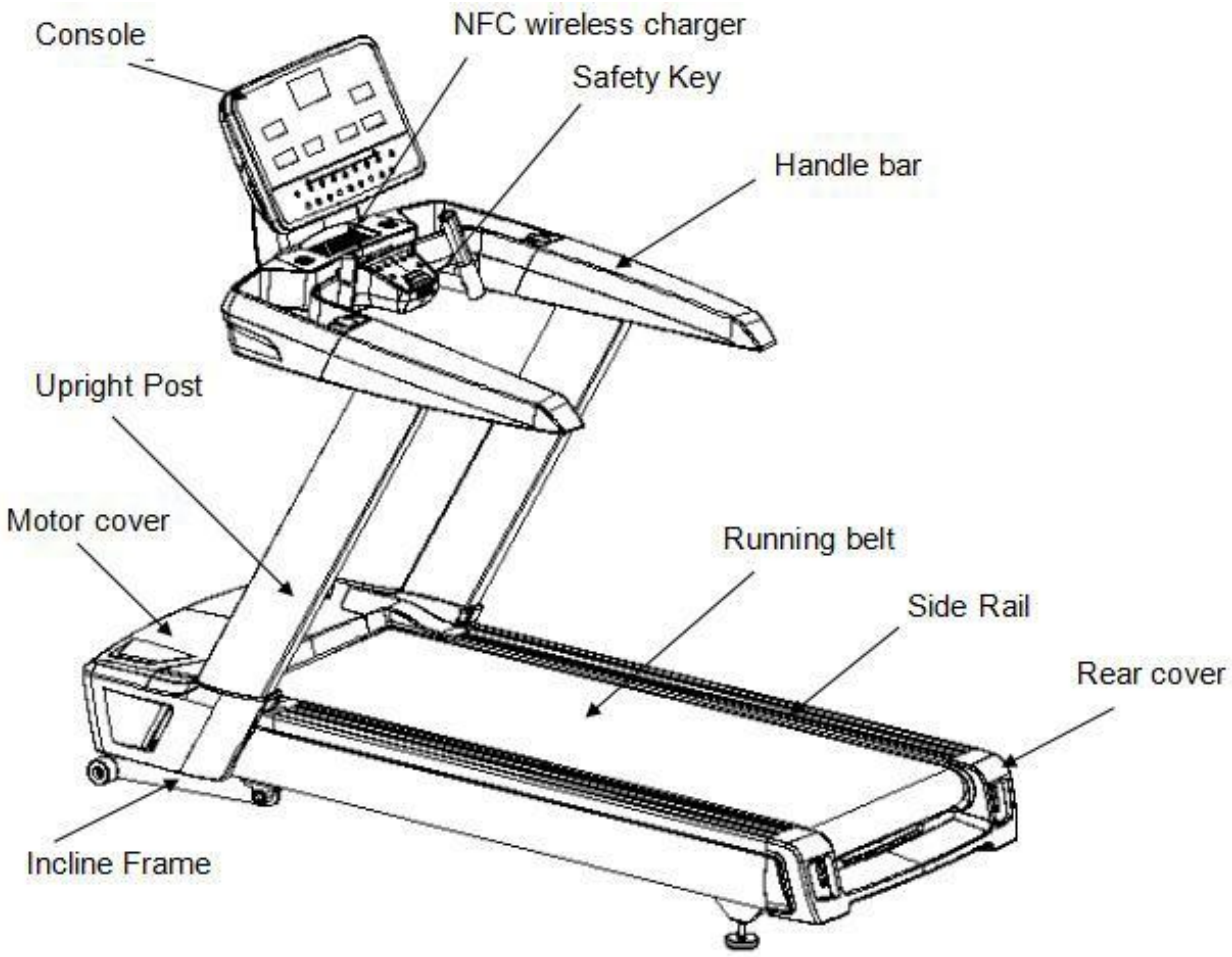

Technical Information

Foldable Dimension	2145*930*1680
Running Area	1580*600
Speed	1.0—25.0km/h
Incline	0-15%

WE RESERVE THE RIGHT TO AMEND THE PRODUCT WITHOUT PRIOR NOTICE.

Packing List

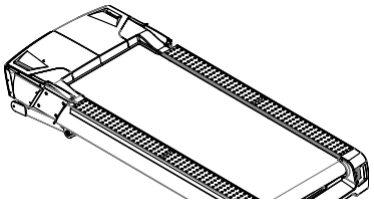

Main Frame

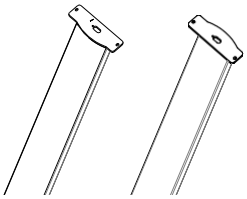

Upright Post Frame (L & R)

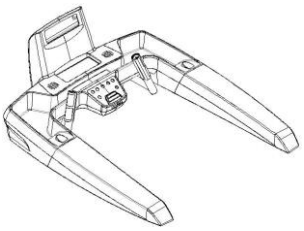

Console Frame

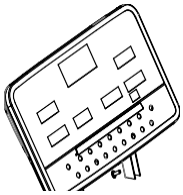

Display Frame

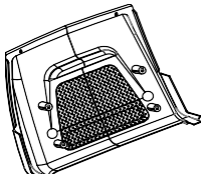

Console Back Cover

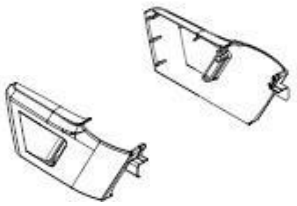

End Cover of Upright Post (L & R)

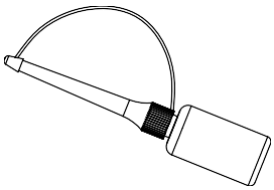

Silicon Oil

Manual

Manual

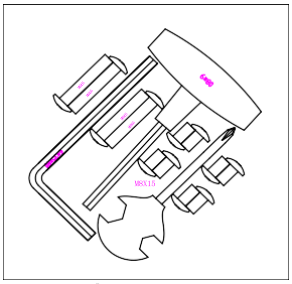

Screw Kit



Power cord

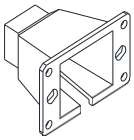

Power cord fastener



Phillips C.K.S. Screw M3*10 (4PCS)

List of Screw Kit



Phillips C.K.S. Self-tapping Screw
(ST4*16) 8PCS

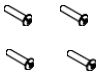

Phillips C.K.S. full thread Screw
(M4*16) 4PCS



Phillips C.K.S. Self-tapping Screw
(ST4*8) 2PCS

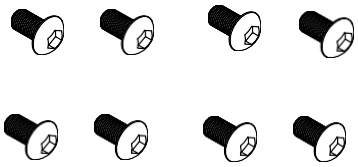

Allen C.K.S. Bolt(full thread)
(M8*20) 8PCS

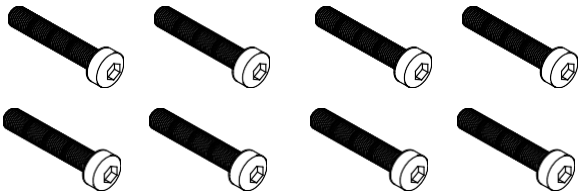

Allen Cylinder Bolt (full thread)
(M8*80) 8PCS

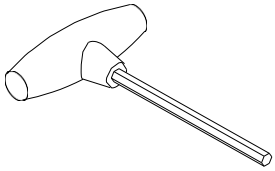

T-type Handle
Allen Wrench * 1PC

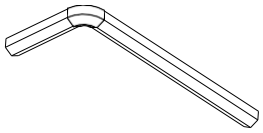

L-type Allen
wrench * 1PC

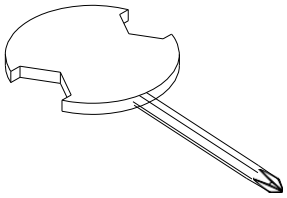

Phillips Screwdriver
1PC

Main Parts

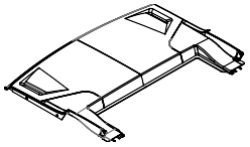

Motor Cover

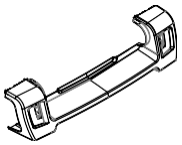

Rear Cover

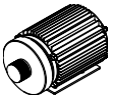

Motor



Motor Belt

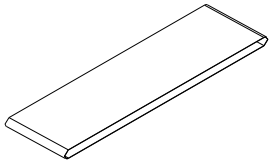

Running belt

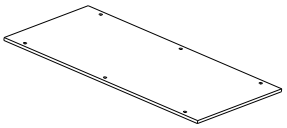

Running Board

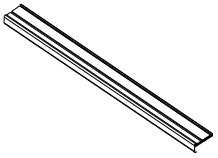

Side Rail

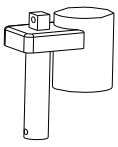

Incline Motor

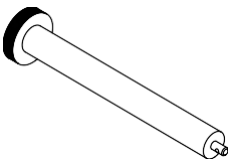

Front Roller

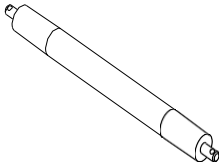

Rear Roller

ASSEMBLING INSTRUCTION

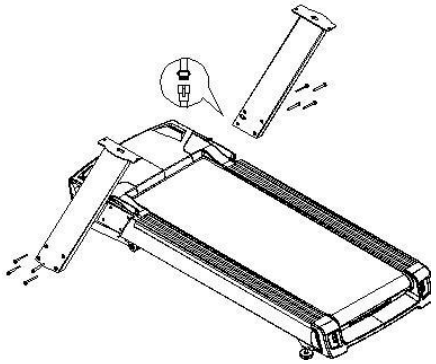

Step1

Take out the machine from box and put it on the flat floor. Place the upright posts into the mounting groove of the main frame and fix the posts by 4pcs of screw (M8*80) for each side.

Please connect the communication wires well before installing the upright post (R).

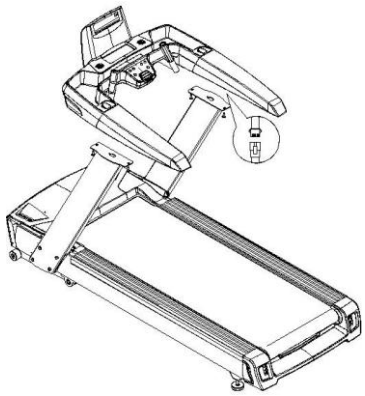

Step 2

Connect communication wire of the right side of console frame with the wire of the upright post (R). Place the console frame on the upright posts and fix them by 4pcs of Screw (M8*20).

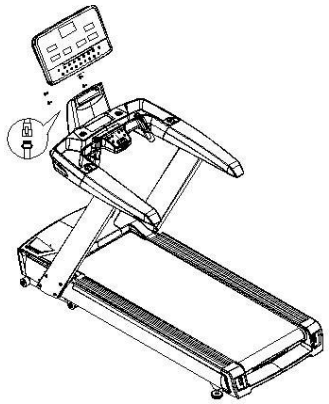

Step 3

Organize the wires first then insert the display frame to the mounting base of the console frame assembly (as image on the left), fix them by 4pcs of screw (M8*20) and connect the communication wires.

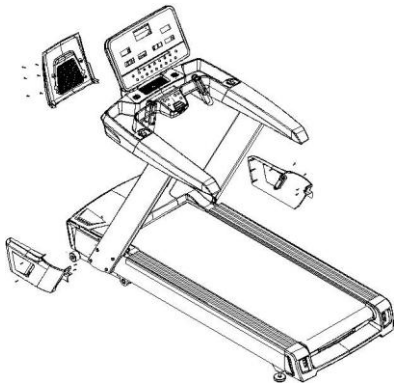

Step 4

Fix the end cover of upright post (L) to the main frame by 2pcs of screw (M4*15) and then fix the end cover by 2pcs of screw (ST4*15). The same way to assemble the end cover of the upright post (R). Assemble the back cover of the console and fix with 4pcs of ST4*15 screws and 2pcs of ST4*8 screws (for the upper part of the back cover). Tighten all the screws.

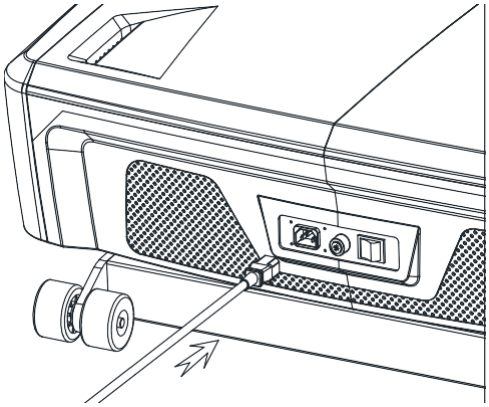

Step 5

Insert the power cord plug into the power socket at the front end of the main frame.

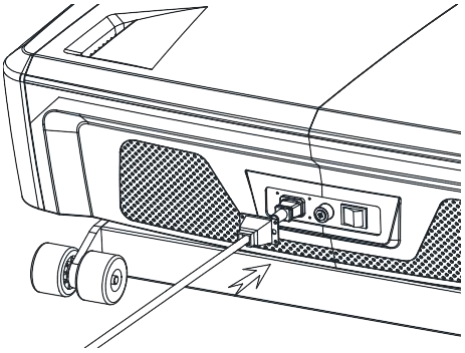

Step6

Insert the power cord into the power cord fastener, then push the power cord fixing piece towards the plug to make it adhere to the iron part of the main frame

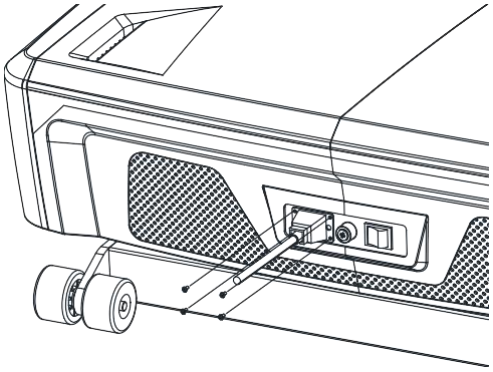

Step7

Use Phillips C.K.S. Screw M3*10 (4PCS) secure the power cord fastener to the main frame. Installation is now done.

General Fitness Tips

1. Warm-up
   Do not hold your breath before warming up for 5-10 minutes before each warm-up.
2. Breathe
   Usually when you are preparing to restore your breath, inhale with your nose and exhale your breath with your mouth. The breathing and movement should be coordinated, such as not breathing too fast. The movement should be stopped immediately is pain occurs.
3. Frequency
   The same part of the muscle should have a rest of 48 hours, that is, the same part can only be trained every other day.
4. Load
   The individuals physical condition determines the amount of training, then according to the principle of asymptotic load to practice, the initial training of muscle soreness is a normal phenomenon, as long as you continue to practice, soreness can be eliminated.
5. Relax
   Do 5 minutes of exercise after each exercise, especially the stretching and relaxation of the muscles of the foot, to avoid long-term muscle condensation, maintain a healthy diet
6. Diet
   In order to help protect the digestive system, wait one hour after meals before exercise, training should be at least half an hour before eating, monitor fluids so as not to increase the heart and kidney burden

Stretching exercises

No matter how fast you walk, it's best to do stretching exercises first. Warm muscles are easier to stretch, so take a 5-10 minute warm-up. Then stop and do the stretching as follows: 5 times, each step for 10 seconds or more; do it again after the workout.

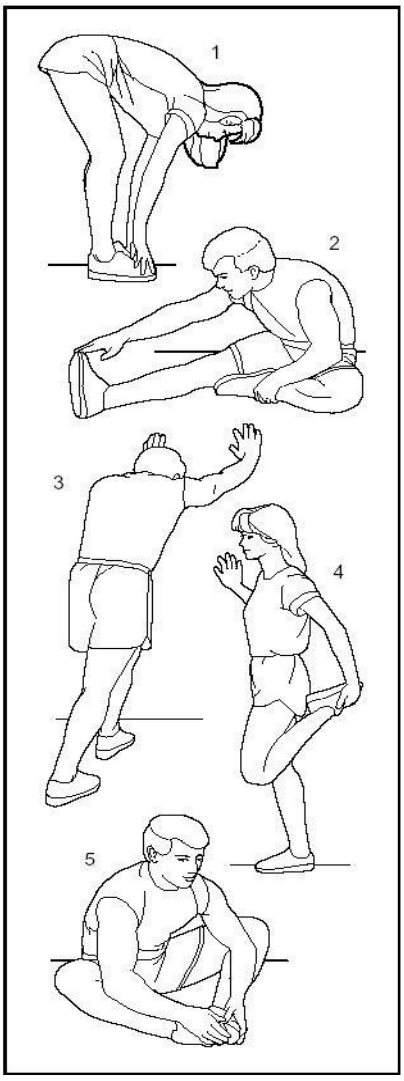

1. Stretch down
   The knees are slightly curved, the body slowly bends forward, let the back and shoulders relax, and the hands try to touch the toes. Keep it for 10~15 seconds, then relax. Repeat 3 times (As picture 1 shown).
2. Tendon stretching
   Sit on a clean seat cushion and straighten one leg. Put the other leg inward so that it fits snugly against the inside of the straight leg. Try to touch the toes with your hands. Keep it for 10~15 seconds, then relax. Repeat 3 times for each leg (As picture 2 shown).
3. Calf and heel stretch
   Hold the wall or tree with both hands and one foot behind. Keep your hind legs upright and your heels on the ground, leaning in the direction of the wall or tree. Keep it for 10~15 seconds, then relax. Repeat 3 times for each leg (As picture 3 shown).
4. Quadriceps stretching
   Grasp the balance with your left hand or the table, then extend your right hand backwards and grab your right ankle and slowly pull it toward your hips until you feel the muscles in front of your thighs are tense. Keep it for 10~15 seconds, then relax. Repeat 3 times for each leg (As picture 4 shown).
5. The sartorius muscle (muscle inside the thigh) stretches
   The soles of the feet are opposite and the knees sit down. Grasp your feet with both hands and pull them in the direction of the groin. Keep it for 10~15 seconds, then relax. Repeat 3 times. (As picture 5 shown)

Console Description

Console Function Description

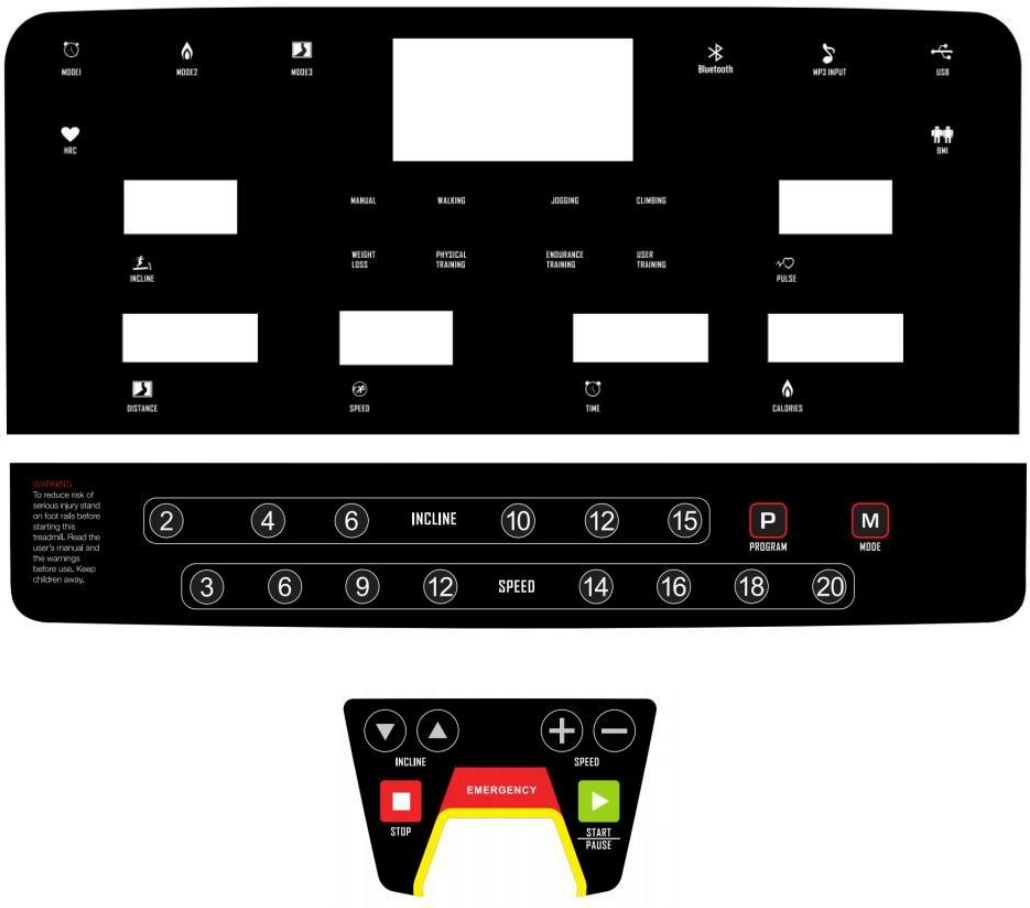

1.1 **P0** is the manual program for users. **P1-P36** is the preset auto program for training. U1~U3 (user-defined program), HRC1~HRC3, FAT.

1.2 1 LED dot matrix screen, 6 digital displays, 23 operation keys.

1.3 Speed Range:1.0~25.0KM/H. Incline Range: 0~15%.

1.4 Controller with Inverter.

1.5 Self-checking system, and warning function of abnormal information.

1.6 Available shift between metric and imperial in program of speed and distance.

1.7 NFC wireless Charger

1.8 MP3 (Optional)

Display Window Description

“SPEED” window displays the value of speed.

“TIME” window displays the value of time.

“DISTANCE” window displays the value of distance and steps.

“CALORIES” window displays the value of calories.

“PULSE” window displays the value of pulse.

“INCLINE “window: display the value of incline.

Keyboard Operation Description

1. **P** is PROGRAM key. Users can select program P0~P36, U1~U3(user defined program), HRC1~HRC3, FAT (body fat function) circularly when the treadmill is under STOP state.

2. **M** is MODE key. When you select Manual mode, the initial state is normal. Press Mode key to select three different countdown operation modes: Time countdown mode --> distance countdown mode --> calorie countdown mode --> normal. The Reset key of default time countdown (30 mins) is in P1-P36.

3. **START** is START/PAUSE key. Press the key to start the treadmill when it's under stop state. Press the key to pause the treadmill when it's running.

4. **STOP** key. Under running state, press STOP key and the treadmill will go to a slow stop.

5. **"+/-"** SPEED control key. Adjust running speed of the treadmill by pressing **"+/-"** key when the treadmill is under the running states. While under the stop or body fat testing states, pressing **"+/-"** key to adjust the setup of the parameter.

6. **Speed Shortcut** key 3,6,9,12/ 14,16,18,20: In the running state, user can adjust the running speed directly to the key specified value as the shortcut shows.

7. ▲/▼ INCLINE control key. In the running state, user can adjust the incline level by pressing ▲/▼.

8. **Incline Shortcut** key 2,4,6,10,12,15: In the running state, user can adjust the incline level directly to the key specified value as the shortcut shows.

Shift between Metric and Imperial

- Pull out the safety key, press PROGRAM and MODE key at the same time, M displays in the screen which means it shifts to Imperial system already.
- Pull out the safety key, press PROGRAM and MODE key at the same time, KM displays in the screen which means it shifts to Metric system already.

Safety Key function

The safety key consists of a tact switch, clothes peg and a nylon cord and has a safety feature for emergency stop.
In any state, once the safety key is pulled out, motor will stop urgently and E-07 displays on the screen with a buzzer sound. The console keys will not operate. Every time the safety key is replaced, the screen will fully display for 2 seconds, and system will enter default working state.

Operation Instruction

1. Put the power cord to a grounded power outlet with. Turn on the power switch, the console screen displays fully and accompanying with prompt sound, then identifies the safety key.

2. Put the safety key in the right position and clip the clothespin to the clothes on the chest. The system will enter the default working state after the screen is fully displayed for 2 seconds. All counters and setting value will be reset to original state. The treadmill is in positive timing mode of the manual program P0.

3. Press **PROGRAM** key to select program P0~P36/ U1~U3/ HRC1~HRC3/ FAT circularly.

3.1 P0 is customized program for users. Press MODE key to select four training modes circularly. Training speed and incline is set by user. Default value of speed is 1.0km/h and default value of incline is 0%.

- **Training Mode 1 - Normal:** Time, distance and calories are all counted positively, disable setting function.

◆ **Training Mode 2 - Time countdown:** Time window flashes under setting state. Press **+/-** key to modify the setting value. Setting range from 5mins~99mins and default 30mins.

◆ **Training Mode 3 - Calorie countdown:** Calorie window flashes under setting state. Press button **+/-** to modify the setting value. Setting range from 20cal to 9990cal and default 50cal.

◆ **Training Mode 4 - Distance countdown:** Distance window flashes under setting state. Press button **+/-** to modify the setting value. Setting range from 1.0km to 99.0km and default 1.0km.

3.2 P1~P36 is setting program of the system and only available for the training under the mode of time countdown. Time window flashes under setting state. Press button **+/-** to modify setting value. Time setting range is from 5mins to 99mins and default 30:00

3.3 Press **START** button after complete training mode setting. The screen starts to display a 5-second countdown and accompanying prompt tone five times. When counting down to 1, the treadmill starts gently, slowly accelerates to the displayed speed and goes into running with constant speed smoothly.

3.3.1 Press button **+/-** or **QUICK SPEED** key to adjust the running speed when it's under running state,

3.3.2 In P1~P36, the speed and incline of each program will be divided into 16 segments. Time of each segment is divided equally in the setting time. Adjusted speed or incline is only effective in the current segment. There's 3 buzzer sounds 3sec ahead of the conversion between the segments. The motor will stop automatically accompanying with a long alert tone after the program runs the whole 16 segments.

3.3.3 When motor is in running state, press **START** button to pause the motor. If press the key again, and the treadmill resumes running. Running data and progress remains.

3.4 When the motor is in running state, press **STOP** button to stop the motor slowly till it stops smoothly. All settings will return to the default state.

3.5 In any state, the motor will stop urgently when the safety key is pulled out and E-07 displays in the window with a buzzer sound.

3.6 The electric control system is in safety monitoring at any time. The running treadmill will stop in an emergency when abnormality is found. The screen will display abnormal information and accompany with alert tone.

3.7 There are three selections in USER mode USER1~USER3. User can access or set up his/her own motion program. Press PROGRAM key to USER mode USER1~USER3, it'll flash in TIME display window now. Users can press speed key **+/-** to set up exercise time. Press MODE key after time setup, it'll flash both in the display window of SPEED & INCLINE. User can set up his/her own program in 16-segment of speed and incline. Press speed key **+/-** to set up the speed of each segment of exercise, and press  to set up the incline level of each segment of exercise. After setting up, user can press START to begin the exercise. User's specified program will be saved and can be accessed to use directly next time.

3.8 Body Fat test method: Press the PROGRAM key to select FAT, the DISTANCE window displays setting project number, then press the MODE key to select project number. TIME display window in the right side displays the parameter of the setting item. Press button **+/-** to adjust the parameters. For the

- **F1** (sex): defined as gender. Parameter range is 1~2. **1** defined as male, **2** defined as female. Default 1.
- **F2** (Age): defined as age. Parameter range is 1~99 years old. Default 25 years old.
- **F3** (Height): defined as height. Parameter range is 100~220cm. Default is 170cm.
- **F4** (Weight): defined as body weight. Parameter range is 20~150kg. Default is 70kg.
- **F5** (BMI): defined the completion of parameter setting and entering body fat testing state. Please

hold the heart rate sensor of the handlebar by both hands for 8 seconds, body fat percentage (BMI) of the user will display in the parameter window. According to UK standards, it's is considered as underweight if BMI less than 18.5. It's considered healthy weight if BMI between 18.5 and 24.9. It's considered as overweight if BMI between 25 and 29. And it's considered obese if BMI is over 29. BMI default 24 (the datum is for exercise purposes only).

NFC Wireless Charger

When the treadmill is powered on, users can put mobile phone with charging function in charging area of machine, to charge the mobile phone wireless.

MP3 Function (Optional)

- The console is a built-in double-channel sound, regulated power supply with switch-mode and mute function for no signal. Connect MP3 headphone jack and audio input of the console through the provided audio line can play music by speaker.
- Insert the headphone cable to the headphone jack of the console. Only the wearer of the headphones can hear the music.
- The USB interface beside the headphone jack is used to play music. The system will play music by reading data automatically after Inserting the multimedia product that's with USB port.

HRC Pattern

1. There are three groups as default HRC. HRC1 with limited speed 9 km/h. HRC2 with limited speed 11 km/h. HRC3 with limited speed 13 km/h.
2. HRC setting method/ sequence/ parameter range. Press PROGRAM key to display HRC, confirming the mode to enter to next setting and press speed key +/- for parameter adjusting. Till complete the setting of last parameters then can start.
   - Setting range for AGE：15~80 years old, default 25 years old.
   - Default THR (target heart rate)：(220 - Age)*0.6
   - THR can be modified with modifying range: 80~180
   - Time setting: Default 30 minutes. Modifying range: 5~99 minutes
3. Relationship with Speed Variation
   A. Frequency of change. The HRC detects heart rate every 30 seconds (Heart rate displays on the screen all the time)
   B. Speed increases by 2km/h when user's heart rate is 30 beats/min below the target heart rate.
   C. Speed increases by 1km/h when user's heart rate is 6~29 beats/min below the target heart rate.
   D. Speed decreases by 2km/h when user's heart rate is 30 beats/min above the target heart rate.
   E. Speed decreases by 1km/h when user's heart rate is 6~29 beats/min above the target heart rate.
   F. Speed remains the same When the user's heart rate is 0~5 beats/min below or above the target heart rate.
4. Under the following situations, the speed of treadmill will slow down to lowest within 20 seconds and stop after running at the lowest speed for 15 seconds with alarm sound every second.
   A. Detect the heart rate every 30 seconds and couldn't detect the heart rate for twice.
   B. 1 km/h (0.6 mph), heart rate leads to deceleration.
   C. The heart rate exceeds (220 - the setting age).
5. Deceleration cannot be lower than 1 km/h (0.6 mph) when the speed is above 1km/h (0.6 mph). For example:

The lowest speed of treadmill is 1 km/h (0.6 mph), when it runs at 1.6 km/h (1.0 mph) and with deceleration 1.0 (2.0) km/h caused by heart rate, then the speed will slow down to 1 km/h (0.6 mph).

6. Incline won't be controlled by the heart rate but by the user. The treadmill won't be controlled by heartbeat for 1 minute before the suer starts running, and only starts running according to the built-in formula after running for 1 minute.

7. Heart rate detection via a chest belt or hand grip may not be 100% accurate; the data is for reference only.

8. Remote heart rate/pulse signal transmission shall be via a 2.4G Bluetooth chest belt/band, rather than the traditional 5.3K Polar T31/T34 chest belts (or other conventional chest belt models).

Bluetooth function (Optional) Kinomap

Register and log in to the Kinomap APP, click on the fitness equipment management pages, click "+"

in the upper right corner to add new fitness equipment. Select My Treadmill and then choose brand "FTMS". Click it on My Treadmill page, then select Bluetooth number XXXX from the fitness equipment and click.

After the Settings are completed, it will automatically redirect to the original interface. In the existing fitness equipment, click on the Bluetooth device you just set up, and the redirected interface will show that it is connecting to Bluetooth.

Wait for 2 to 5 seconds. The APP will show that it is connected, and the electronic watch device will show that the BLU connection to Bluetooth is successful.

When connecting to Kinomap or Zwift, the treadmill must be in standby mode. Once the app is connected, press the "Start" button. Failure to do so may result in the app failing to receive the RPM signal correctly.

Zwift

Download, register and log in to the Zwift APP, enter the setting page:

Under WHO ARE YOU page, click CREATE YOUR ACCOUNT for

treadmill: After registration, go to this page and click on any one of them, select the Bluetooth code, which is same as the code tagged on the equipment console, if there is a green arrow indicating that it is connected, it means that Bluetooth is connected.

Connect to Bluetooth music

Turn on the Bluetooth of your phone. If it is the first time to connect to music Bluetooth, search for the Bluetooth device with the name Run Music in other devices and connect.

Automatic Program P1-P36 Metric Speed / Incline Table

PROG \ SEG		1	2	3	4	5	6	7	8	9	10	11	12	13	14	15	16
P1	SPEED	1.0	3.0	3.0	7.0	7.0	5.0	5.0	5.0	7.0	7.0	5.0	5.0	5.0	5.0	3.0	2.0
	INCLINE	2	2	6	6	8	8	6	6	4	4	4	6	6	2	2	2
P2	SPEED	2.0	3.0	3.0	6.0	5.0	5.0	8.0	5.0	5.0	6.0	8.0	8.0	8.0	5.0	4.0	3.0
	INCLINE	3	3	9	9	9	2	2	8	8	4	1	1	4	4	4	4
P3	SPEED	2.0	3.0	5.0	5.0	7.0	7.0	8.0	5.0	5.0	6.0	8.0	8.0	8.0	5.0	4.0	3.0
	INCLINE	1	2	3	4	5	5	7	7	4	4	4	4	6	3	2	2
P4	SPEED	2.0	2.0	3.0	5.0	5.0	5.0	8.0	8.0	8.0	8.0	5.0	5.0	5.0	3.0	3.0	2.0
	INCLINE	3	3	6	6	6	9	9	9	9	9	9	6	6	6	2	2
P5	SPEED	3.0	4.0	5.0	6.0	7.0	8.0	9.0	10.0	10.0	10.0	9.0	8.0	7.0	5.0	4.0	3.0
	INCLINE	2	2	4	4	8	8	6	6	6	6	8	7	6	5	1	1
P6	SPEED	3.0	4.0	5.0	5.0	6.0	6.0	7.0	7.0	7.0	9.0	9.0	10.0	10.0	11.0	5.0	3.0
	INCLINE	1	8	8	8	8	8	7	7	7	7	7	5	5	3	3	1
P7	SPEED	3.0	4.0	9.0	4.0	11.0	4.0	10.0	4.0	9.0	4.0	8.0	4.0	11.0	5.0	3.0	2.0
	INCLINE	1	1	4	4	4	6	6	6	8	8	8	10	10	10	6	2
P8	SPEED	3.0	5.0	8.0	3.0	5.0	7.0	9.0	3.0	5.0	7.0	10.0	3.0	5.0	7.0	11.0	5.0
	INCLINE	3	3	8	8	3	3	7	7	3	3	6	6	3	3	5	5
P9	SPEED	3.0	7.0	9.0	4.0	7.0	10.0	4.0	7.0	11.0	5.0	7.0	12.0	4.0	7.0	12.0	6.0
	INCLINE	3	6	6	3	7	7	3	8	8	3	9	9	3	3	7	7
P10	SPEED	3.0	5.0	6.0	6.0	6.0	9.0	10.0	6.0	6.0	9.0	10.0	6.0	6.0	6.0	11.0	3.0
	INCLINE	2	7	7	7	5	5	5	8	8	8	8	8	8	4	4	4
P11	SPEED	4.0	5.0	7.0	9.0	10.0	11.0	9.0	6.0	8.0	9.0	10.0	10.0	11.0	9.0	6.0	5.0
	INCLINE	1	6	6	6	3	3	3	7	7	4	4	4	4	6	6	6
P12	SPEED	4.0	6.0	10.0	10.0	7.0	10.0	10.0	10.0	7.0	7.0	10.0	10.0	10.0	10.0	6.0	5.0
	INCLINE	3	8	8	6	9	9	5	5	8	8	8	4	4	4	4	4
P13	SPEED	4.0	12.0	4.0	12.0	4.0	12.0	4.0	12.0	4.0	12.0	4.0	12.0	4.0	12.0	4.0	12.0
	INCLINE	4	8	10	12	4	8	10	12	4	8	10	12	4	8	10	12
P14	SPEED	2.0	3.0	3.0	6.0	9.0	11.0	3.0	6.0	9.0	11.0	3.0	6.0	9.0	11.0	3.0	6.0
	INCLINE	5	9	11	12	5	9	11	12	5	9	11	12	5	9	11	12
P15	SPEED	4.0	6.0	11.0	11.0	9.0	6.0	11.0	11.0	9.0	6.0	11.0	11.0	9.0	6.0	11.0	11.0
	INCLINE	2	3	4	5	6	8	7	8	8	7	7	6	5	4	3	2
P16	SPEED	2.0	4.0	4.0	12.0	4.0	12.0	4.0	12.0	4.0	12.0	4.0	12.0	4.0	12.0	4.0	12.0
	INCLINE	2	4	5	6	2	4	5	6	2	4	5	6	2	4	5	6
P17	SPEED	2.0	2.0	2.0	4.0	6.0	6.0	9.0	11.0	11.0	2.0	4.0	6.0	6.0	11.0	11.0	9.0
	INCLINE	2	4	6	8	10	12	12	12	12	12	12	10	8	6	4	2
P18	SPEED	3.0	6.0	3.0	6.0	6.0	3.0	6.0	6.0	3.0	6.0	6.0	3.0	6.0	6.0	3.0	6.0
	INCLINE	2	6	8	2	6	8	2	6	8	2	6	8	2	6	8	2
P19	SPEED	4.0	12.0	4.0	12.0	4.0	12.0	4.0	12.0	4.0	12.0	4.0	12.0	4.0	12.0	4.0	12.0
	INCLINE	10	8	6	4	10	8	6	4	10	8	6	4	10	8	6	4
P20	SPEED	5.0	13.0	5.0	13.0	5.0	13.0	5.0	13.0	5.0	13.0	5.0	13.0	5.0	13.0	5.0	13.0
	INCLINE	12	8	2	12	8	2	12	8	2	12	8	2	12	8	2	2
P21	SPEED	2.0	6.0	2.0	6.0	11.0	2.0	6.0	11.0	2.0	6.0	11.0	2.0	6.0	11.0	2.0	6.0
	INCLINE	12	9	3	12	9	3	12	9	3	12	9	3	12	9	3	3
P22	SPEED	4.0	6.0	11.0	6.0	2.0	11.0	6.0	2.0	11.0	6.0	2.0	11.0	6.0	2.0	11.0	6.0
	INCLINE	2	4	10	2	4	10	2	6	12	6	8	12	6	8	12	2

P23	SPEED	4.0	6.0	11.0	6.0	6.0	2.0	11.0	6.0	6.0	2.0	11.0	6.0	6.0	2.0	11.0	6.0
	INCLINE	2	3	4	5	6	6	7	8	10	11	12	12	12	12	10	2
P24	SPEED	4.0	6.0	11.0	6.0	4.0	11.0	6.0	4.0	11.0	6.0	4.0	11.0	6.0	4.0	11.0	6.0
	INCLINE	4	4	5	6	7	8	10	10	12	12	12	12	12	12	10	2
P25	SPEED	5.0	13.0	5.0	13.0	5.0	13.0	5.0	13.0	5.0	13.0	5.0	13.0	5.0	13.0	5.0	13.0
	INCLINE	5	9	11	12	5	9	11	12	5	9	11	12	5	9	11	12
P26	SPEED	3.0	4.0	4.0	7.0	10.0	12.0	4.0	7.0	10.0	12.0	4.0	7.0	10.0	12.0	4.0	7.0
	INCLINE	6	10	12	12	6	10	11	12	6	10	12	12	6	10	12	12
P27	SPEED	5.0	7.0	12.0	12.0	10.0	7.0	12.0	12.0	10.0	7.0	12.0	12.0	10.0	7.0	12.0	12.0
	INCLINE	3	4	5	6	7	9	8	9	9	8	8	7	6	5	4	3
P28	SPEED	3.0	5.0	5.0	13.0	5.0	13.0	5.0	13.0	5.0	13.0	5.0	13.0	5.0	13.0	5.0	13.0
	INCLINE	3	5	6	7	3	5	6	7	3	5	6	7	3	5	6	7
P29	SPEED	3.0	3.0	3.0	5.0	7.0	7.0	10.0	12.0	12.0	3.0	5.0	7.0	7.0	12.0	12.0	10.0
	INCLINE	3	5	7	9	11	12	12	12	12	12	12	11	9	7	5	3
P30	SPEED	4.0	7.0	4.0	7.0	7.0	4.0	7.0	7.0	4.0	7.0	7.0	4.0	7.0	7.0	4.0	7.0
	INCLINE	3	7	9	3	7	9	3	7	9	3	7	9	3	7	9	3
P31	SPEED	5.0	13.0	5.0	13.0	5.0	13.0	5.0	13.0	5.0	13.0	5.0	13.0	5.0	13.0	5.0	13.0
	INCLINE	11	9	7	5	11	9	7	5	11	9	7	5	11	9	7	5
P32	SPEED	6.0	14.0	6.0	14.0	6.0	14.0	6.0	14.0	6.0	14.0	6.0	14.0	6.0	14.0	6.0	14.0
	INCLINE	12	9	3	12	9	3	12	9	3	12	9	3	12	9	3	3
P33	SPEED	3.0	7.0	3.0	7.0	12.0	3.0	7.0	12.0	3.0	7.0	12.0	7.0	7.0	12.0	3.0	7.0
	INCLINE	12	10	4	12	10	4	12	10	4	12	10	4	12	10	4	4
P34	SPEED	5.0	7.0	12.0	7.0	3.0	12.0	7.0	3.0	12.0	7.0	3.0	12.0	7.0	3.0	12.0	7.0
	INCLINE	3	5	11	3	5	11	3	7	12	7	9	12	7	9	12	3
P35	SPEED	5.0	7.0	12.0	7.0	7.0	3.0	12.0	7.0	7.0	3.0	12.0	7.0	7.0	3.0	12.0	7.0
	INCLINE	3	4	5	6	7	7	8	9	11	12	12	12	12	12	11	3
P36	SPEED	5.0	7.0	12.0	7.0	5.0	12.0	7.0	5.0	12.0	7.0	5.0	12.0	7.0	5.0	12.0	7.0
	INCLINE	5	5	6	7	8	9	11	11	12	12	12	12	12	12	11	3

Moving the Treadmill

Make sure follow all the points when moving the treadmill:

1. Restore the incline to flat (0) position.
2. The power switch of treadmill is OFF.
3. Remove the power cord from the power socket.

After clearly following the above points, lift the machine by firmly holding the end of running platform. Standing up straightly to move the machine forward or backward slowly and lay it flat gently in the right position.

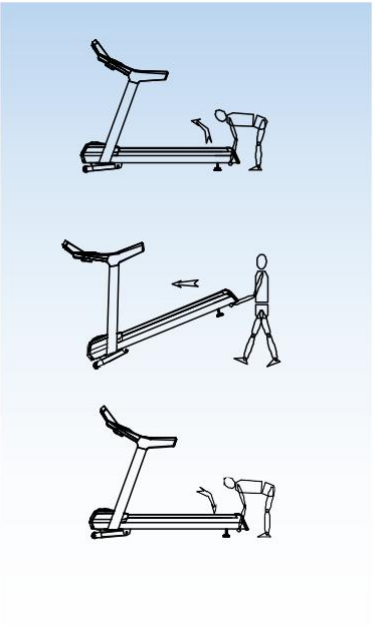

Grounding Guide

This product must be grounded. If the treadmill fails or is damaged, the ground wire can form a minimum resistance circuit, the current into the ground, thereby reducing the risk of electric shock. This product is equipped with a cable that has a conductor to ground the unit and a grounding plug. This plug must be plugged into a socket that complies with local codes and regulations for installation and grounding requirements.

Danger! Improper connection of the equipment grounding conductor may result in an electric shock hazard. If you do not know if the equipment is properly grounded, consult a qualified electrician or service person. Do not change the plug that comes with this product. If the plug does not conform to the socket, allow a qualified electrician to install a suitable outlet.

This product uses a 220-240 volts line and is equipped with a grounded outlet as shown in the illustrations below.

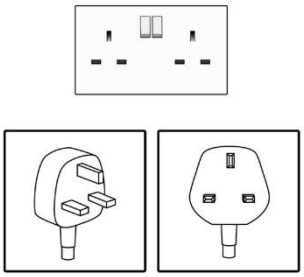

Treadmill Use instruction

1. Power on, the treadmill will start to the lowest position, check the machine is normal.
2. Attach the safety lock clip to the skirt of the sportsman's chest.

   Before running, you must confirm the stability of the treadmill and function is normal. It is strictly prohibited to stand on the run belt before starting, you should stand on the side bar, handlebar, once confirm everything well then start running. When power on, put one hand to seize the handlebars, press the "START " button, treadmill delay starts then after 5 seconds it goes to 1.0km / h speed. Press the "speed" "+" key, the motor speeds up to 2.5 ~ 3.5km / h (this is a most suitable running speed), both hands grab handlebars, feet must step on the running belt, can run with the same speed.
3. After a few minutes, you can speed up the running, the growth rate of the requirements is holding hands with the handlebars, press the speed " - " key to run slowly.
4. During the running time, press the speed shortcut keys, you can quickly enter the running speed you need.
5. Press "Stop" key to stop the motor at any time during running.
6. Preset mode: Press the "Select" button to select one of the automatic operation modes as the current running mode. Press the "Start" key to start the treadmill. The treadmill starts to run automatically according to the selection mode. In operation, you can press the speed "+ " key or speed "- " key to change the current running speed. Press "Stop" to stop the motion.
7. HRC test (optional): switch on the treadmill, the hands hold the HRC metal sensor chip, a few seconds after the heart rate display window will display the user's heart rate value. (Note: this value is not as medical data, only as a sports reference.

Treadmill Maintenance

1. Lubrication

After the running belt has been used for a period, it must be lubricated with the configured methyl silicone oil. Suggestion ：

- ❖ Using time less than 3 hours every week lubrication once every 5 months
- ❖ Using time equal to 4-7 hours every week lubrication once every 2 months
- ❖ Using time more than 7 hours every week lubrication once every month

No excessive lubrication. Note: the important factor in increasing the lifetime for treadmill is proper lubrication.

2. The way of checking whether the running belt needs lubrication is, lift the side soft the treadmill and feel the central back of the belt, as far as possible. If traces of silicon spray are found, lubrication is not necessary. If the surface is dry, the belt needs lubrication.

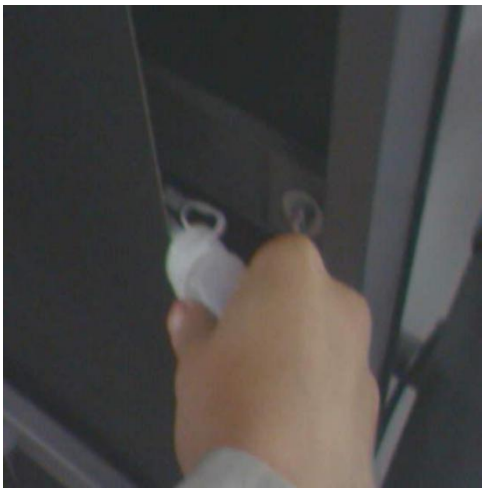

Application of lubricant on the belt (as shown):

- ● Stop the running belt and fold the treadmill. Lift the belt that's behind the back of main frame and try to send the oil can to the middle of the belt.
- ● Spray silicone oil to the inner side of the running belt and coat both sides of the running belt with silicone oil.
- ● Run the treadmill at a speed of 1km/h to apply silicone evenly. And tread lightly on the running belt from left to right. Keep it running for several minutes then the silicon oil can be fully absorbed by the running belt.

3. Belt Adjustment

All running belts are properly set at the factory and after assembly. However, slack may occur after a period of use. Pause and slip may occur when running. When this phenomenon occurs, adjust the running belt and screw in half a turn left and right. If the running belt is loose, the running belt and the roller will slip in turn. But too tight is also not good, which is easy to increase the load of the motor and damage the motor, running belt and roller, etc.

4. Adjustment of belt deviation:

All running belts are properly set at the factory and after assembly. But after a period, the belt has the possibility for deviation. The reasons can be listed as follows.

①The treadmill is unstable.
②Feet didn't in the central of the running belt when running.
③Feet exert uneven force.

If deviation is caused by the user, No - load rotation for a few minutes can return to normal. Adjusting step by step in half a turn with a 6mm Allen wrench that is equipped if unable to restore automatically.

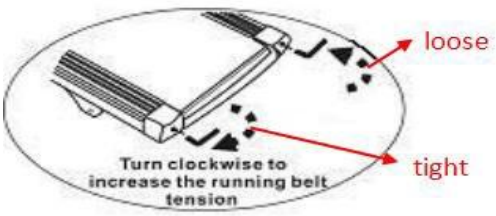

Such as left deviation of running belt. Adjust the left screw clockwise or the right screw anticlockwise.

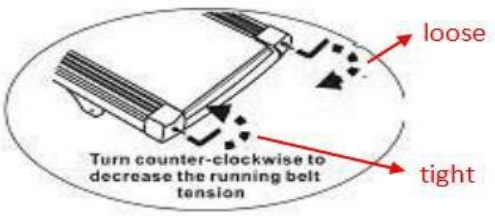

Such as right deviation of running belt. Adjust the right screw clockwise or the left screw anticlockwise.

Running belt deviation is not covered by the warranty and is mainly maintained by users according to the instructions. Running deviation can seriously damage the running belt. It must be found and corrected in time.

5. Adjustment of the motor's belt

The motor belt of the treadmill is adjusted in the factory and after assembly. However, after a period of use, there may be slack or slip phenomenon.

Adjustment Steps: ① Turn the adjusting screw counterclockwise with wrench.

② The adjustment range shall be subject to the belt load not slipping.

NOTE: Regular cleaning of belts and pulley grooves

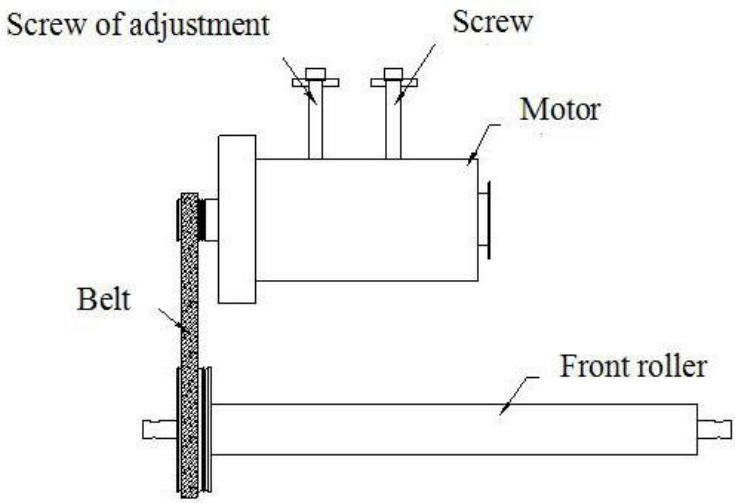

Cleaning

Regular cleaning of the striding belt ensures a long product life.

Warning: The treadmill must be turned off to avoid electrical shocks. The power cord must be pulled out of the socket, before starting the cleaning or maintenance.

- After training: Wipe the console and other surfaces with a clean soft and damp cloth to remove sweat residues.
  Caution: Do not use any abrasives or solvents. To avoid damage to the computer, keep any liquids away. Do not expose the computer to direct sunlight.
- Weekly: To make the cleaning easier it is recommended to use a mat for the treadmill. Shoes can leave dirt on the striding belt that can fall beneath the treadmill. Clean the mat under the treadmill once a week. **Storage:** Store your treadmill in a clean and dry environment. Ensure the master power switch is off and is unplugged from the electrical wall outlet.

Common faults and troubleshooting methods

Problem & code	Reason	How to settle the problem
Treadmill out of working	A. The power supply was not connected or the power switch was turned off.	Connect the power supply or turn on the power switch.
	B. Safety key wasnot in right position.	Place the safety key to the correct position
	C. Transformer not connected well or transformer is defective.	Reconnect the transformer or replace the transformer.
	D. Circuit broken.	Check the port of input & output and the communication wire
Treadmill stop suddenly	A. Safety key drop off	Reconnect the safety key
	B. System abnormaly	Ask for repairing
Key out of work	A. Key broken or invalid	Replace the key
	B. All keys invalid	1. Replace the key board and wires. 2. Replace the PCBA. 3. Replace the console.
	C.Bad connection between motor wire and controller.	Reconnect the wire or replace the controller
E7	The console can't detect the safety key signal	1. Check whether the safety key is inserted well. 2. Reassembly the safety key device.
No pulse display	A. Handle pulse wire isn't connected well or the wire is defective.	Reconnect or replace the wire
	B. Console circuitry defected	Replace console
Console short of display	A. Screws of display board loosed	Tighten the screws.
	B. System failure	Replace console
E01	Inverter trip out under low voltage state	Replace inverter or ask for professional checking
E02	Temperature sensor abnormal	Replace inverter or ask for professional checking
E04	Inverter output overcurrent protection	Replace inverter or ask for professional checking
E06	Inverter overvoltage protection	Replace inverter or ask for professional checking
E09	Inverter overheat protection	Replace inverter or ask for professional checking
E21	Flash program error	Replace inverter or ask for professional checking
E22	Program error	Replace inverter or ask for professional checking
E23	Low voltage alarm	Replace inverter or ask for professional checking
E25	Emergency stop alarm	Replace inverter or ask for professional checking
E0A	Motor overload protection	Replace motor or inverter
E0B	Inverter overload protection	Replace inverter or ask for professional checking
E0C	System abnormal under overload	Replace inverter or ask for professional checking